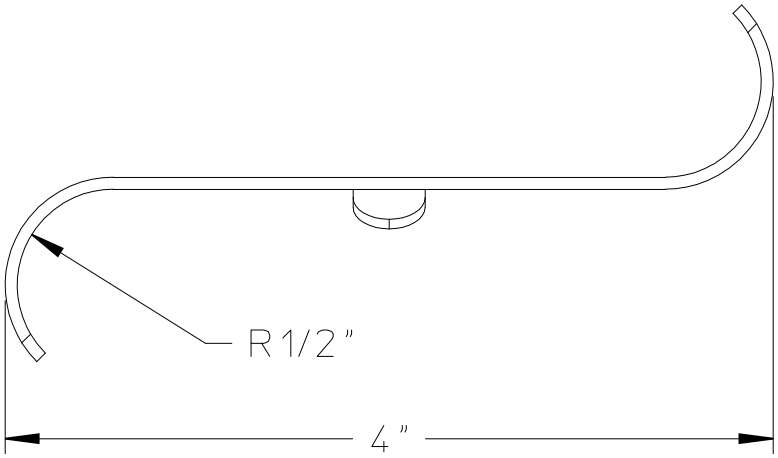

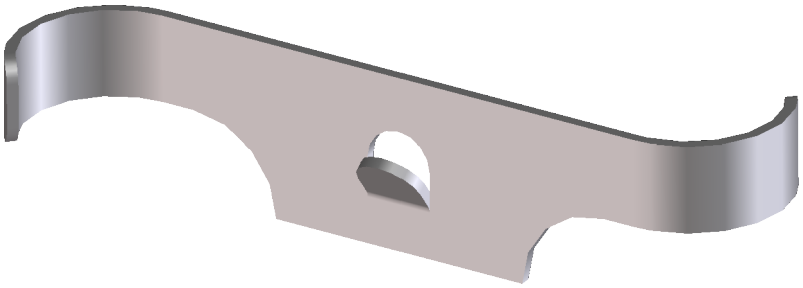

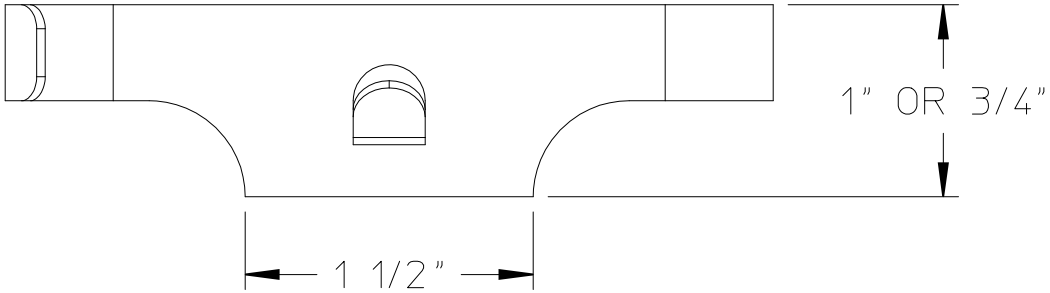

Dimensions & Details

A	B	C	D	E	F	G	H	I

Standard Material Option	
1	Carbon Steel
2	304 SS
3	310 SS
4	Inconel 625

Other materials Are available on request

Anchor Tech

AnchorTech, LLC
16610 SE 34th Way
Vancouver, WA 98683
Phone: (360)836-8217
Fax: (360)326-3835
Model: (651)238-5949
Email: Ayecapnbob@aol.com
www.AnchorTechLLC.com

AT-S-Bar-20

Quantity	Alloy	Details